FORCE
The real best drive

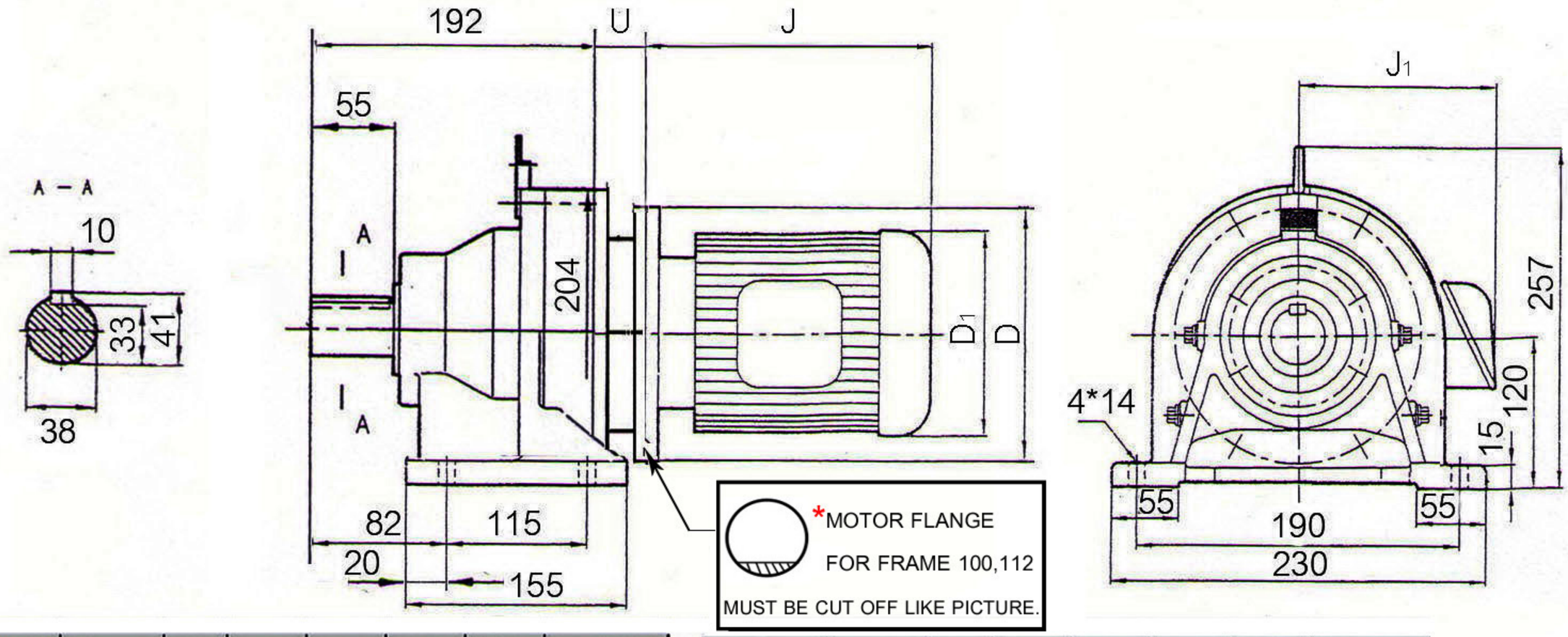

Power(KW)	Frame	U	J	J1	D	D1	Weight(kg)
0.55	80M4A	73	256	145	200	166	41
0.75	80M4B	73	256	145	200	166	42
1.1	90S4A	83	268	155	200	188	46
1.5	90L4A	83	293	155	200	188	50

Power(KW)	Frame	U	J	J1	D	D1	Weight(kg)
2.2	100L4A	91	330	170	250*	210	57
3	100L4B	91	330	170	250*	210	61
4	112M4A	91	340	198	250*	230	69

* Based on IEC Motor

Unit : mm

Model XK3C